For 07-3001-4900 sales, parts and service, click here to view this item on PilotJohn.com

OPERATION & SERVICE MANUAL

Model: 07-3001-4900
Fuel Sample Unit

07/2023 – Rev. 04

Tronair, Inc.
1 Air Cargo Pkwy East
Swanton, OH 43558

Phone: (419) 866-6301 | 800-426-6301
Web: www.tronair.com
Email: sales@tronair.com

For 07-3001-4900 sales, parts and service, click here to view this item on PilotJohn.com

REVISION	DATE	TEXT AFFECTED
04	07/2023	Major Revision

For 07-3001-4900 sales, parts and service, click here to view this item on PilotJohn.com

TABLE OF CONTENTS

PAGE

1.0 PRODUCT INFORMATION 1
1.1 DESCRIPTION 1
1.2 MODEL & SERIAL NUMBER 1
1.3 MANUFACTURER 1
2.0 SAFETY INFORMATION 1
2.1 USAGE AND SAFETY INFORMATION 1
2.1 PERSONAL PROTECTION EQUIPMENT 1
3.0 TRAINING 1
3.1 TRAINING REQUIREMENTS 1
3.2 TRAINING PROGRAM 1
3.3 OPERATOR TRAINING 1
4.0 OPERATION 2
5.0 PACKAGING AND STORAGE 2
6.0 PROVISION OF SPARES 2
6.1 SOURCE OF SPARE PARTS 2
6.2 RECOMMENDED SPARE PARTS LISTS 2
7.0 IN SERVICE SUPPORT 2
8.0 GUARANTEES/LIMITATION OF LIABILITY 2

For 07-3001-4900 sales, parts and service, click here to view this item on PilotJohn.com

This product can not be modified without the written approval of Tronair, Inc. Any modifications done without written approval voids all warranties and releases Tronair, Inc., it suppliers, distributors, employees, or financial institutions from any liability from consequences that may occur. Only Tronair OEM replacement parts shall be used.

1.0 PRODUCT INFORMATION

1.1 DESCRIPTION

This fuel sample unit is designed to collect fuel samples from aviation equipment.

1.2 MODEL & SERIAL NUMBER

Reference nameplate on unit

1.3 MANUFACTURER

TRONAIR, Inc.
1 Air Cargo Pkwy East
Swanton, Ohio 43558 USA

Telephone: (419) 866-6301 or 800-426-6301
Fax: (419) 867-0634
E-mail: sales@tronair.com
Website: www.tronair.com

2.0 SAFETY INFORMATION

This product does not fall under any of the European Community marking directives and cannot carry the CE mark. It has been designed and manufactured to be safe and reliable, but some risks remain.

2.1 USAGE AND SAFETY INFORMATION

To insure safe operations please read the following statements and understand their meaning. Also refer to your equipment manufacturer's manual for other important safety information. This manual contains safety precautions which are explained below. Please read carefully.

WARNING!
Warning is used to indicate the presence of a hazard that can cause ***severe personal injury, death, and/or substantial property damage*** if the Warning Notice is ignored.

CAUTION!
Caution is used to indicate the presence of a hazard, which will or can cause ***minor personal injury or property damage*** is the Caution Notice is ignored.

2.1 PERSONAL PROTECTION EQUIPMENT

Due to the fluids involved, the use of personal protective equipment is required while using this equipment. Refer to applicable Safety Data Sheets.

WARNING!
Fuel sample units are designed to sample jet fuel which is highly flammable. Take proper care to prevent accidental ignition of fuel.

3.0 TRAINING

3.1 TRAINING REQUIREMENTS

The employer of the operator is responsible for providing a training program sufficient for the safe operation of the unit.

3.2 TRAINING PROGRAM

The employer provided operator training program should cover safety procedures concerning use of the unit in and around the intended aircraft at the intended aircraft servicing location.

3.3 OPERATOR TRAINING

The operator training should provide the required training for safe operation of the unit.

NOTE: Maintenance and Trouble Shooting are to be performed by a skilled and trained technician.

For 07-3001-4900 sales, parts and service, click here to view this item on PilotJohn.com

4.0 OPERATION

Before use, the fuel sample unit should be inspected for cleanliness and cleaned as required.

Refer to the AMM for fuel sampling procedure.

Once samples are taken and analyzed, dispose of fuel in an approved manner. Refer to applicable Safety Data Sheets.

5.0 PACKAGING AND STORAGE

Clean sampler as required and store in a clean, dry location.

6.0 PROVISION OF SPARES

6.1 SOURCE OF SPARE PARTS

Spare parts may be obtained from the manufacturer:

TRONAIR, Inc.	Telephone:	(419) 866-6301 or 800-426-6301
1 Air Cargo Pkwy East	Fax:	(419) 867-0634
Swanton, Ohio 43558 USA	E-mail:	sales@tronair.com
	Website:	www.tronair.com

For Spare Parts, Operations & Service Manuals or Service Needs:
Scan the QR code or visit Tronair.com/aftermarket

6.2 RECOMMENDED SPARE PARTS LISTS

Reference the following page for Replacement Parts and Kits available.

7.0 IN SERVICE SUPPORT

Contact Tronair, Inc. for technical services and information. See Section 1.3 – Manufacturer.

8.0 GUARANTEES/LIMITATION OF LIABILITY

Tronair products are warranted to be free of manufacturing or material defects for a period of one year after shipment to the original customer. This is solely limited to the repair or replacement of defective components. This warranty does not cover the following items:

a) Parts required for normal maintenance
b) Parts covered by a component manufacturers warranty
c) Replacement parts have a 90-day warranty from date of shipment

If you have a problem that may require service, contact Tronair immediately. Do not attempt to repair or disassemble a product without first contacting Tronair, any action may affect warranty coverage. When you contact Tronair be prepared to provide the following information:

a) Product Model Number
b) Product Serial Number
c) Description of the problem

If warranty coverage is approved, either replacement parts will be sent or the product will have to be returned to Tronair for repairs. If the product is to be returned, a Return Material Authorization (RMA) number will be issued for reference purposes on any shipping documents. Failure to obtain a RMA in advance of returning an item will result in a service fee. A decision on the extent of warranty coverage on returned products is reserved pending inspection at Tronair. Any shipments to Tronair must be shipped freight prepaid. Freight costs on shipments to customers will be paid by Tronair on any warranty claims only. Any unauthorized modification of the Tronair products or use of the Tronair products in violation of cautions and warnings in any manual (including updates) or safety bulletins published or delivered by Tronair will immediately void any warranty, express or implied.

The obligations of Tronair expressly stated herein are in lieu of all other warranties or conditions expressed or implied. **Any unauthorized modification of the Tronair products or use of the Tronair products in violations of cautions and warnings in any manual (including updates) or safety bulletins published or delivered by Tronair will immediately *void any warranty, express or implied* and Tronair *disclaims any and all liability for injury (WITHOUT LIMITATION and including DEATH), loss or damage arising from or relating to such misuse*.**

For 07-3001-4900 sales, parts and service, click here to view this item on PilotJohn.com

Parts List

When ordering Replacement Parts/Kits, please specify Model, Color and Serial Number of your Unit

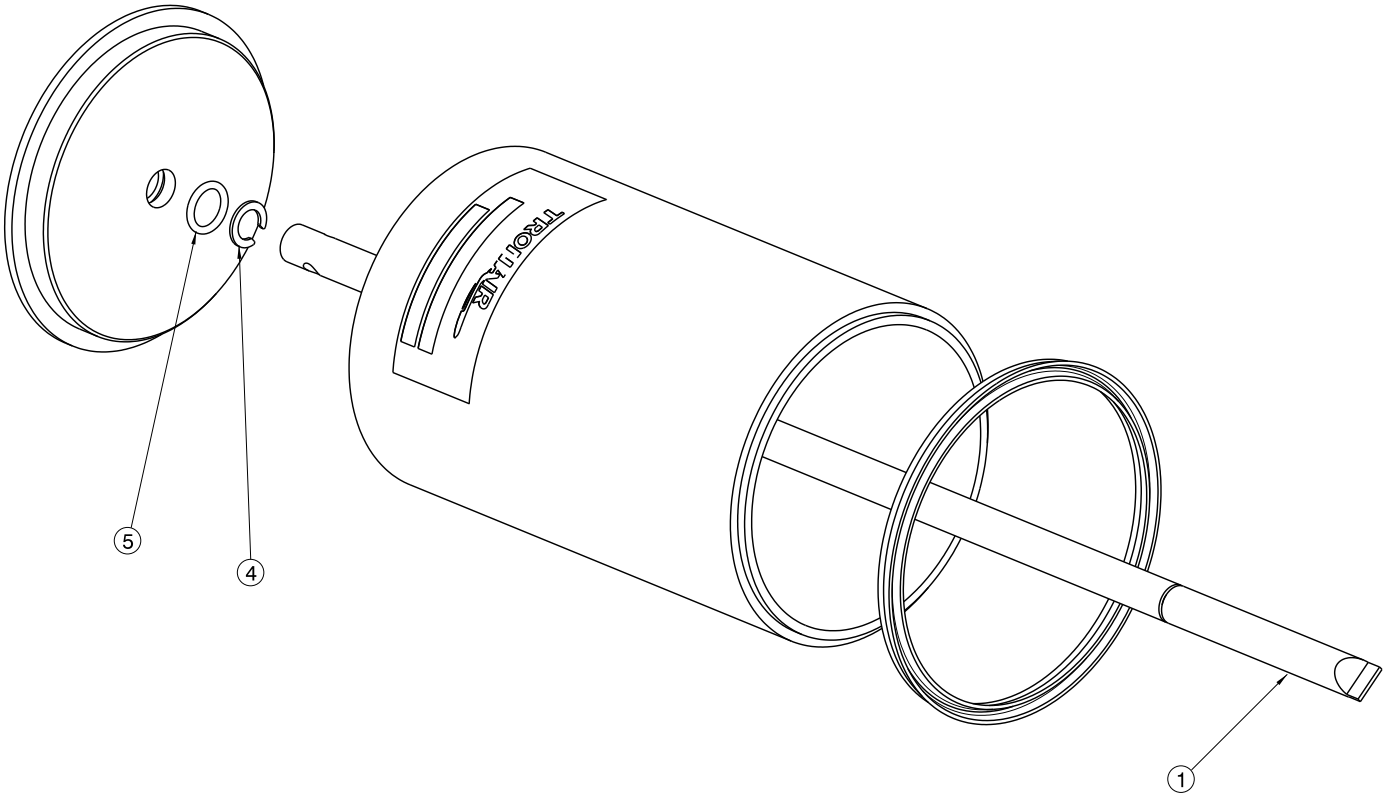

Item	Part Number	Description	Qty
1	R-1114	Rod	1
4	G-1393-13	Ring, E-Type Retaining	1
5	HC-2007-112	O-Ring, Series 2, Viton	1