For 07-3006-6900 sales, parts and service, click here to view this item on PilotJohn.com

07-3006-6900 – Fuel Sample Unit

This product can not be modified without the written approval of Tronair, Inc. Any modifications done without written approval voids all warranties and releases Tronair, Inc., it suppliers, distributors, employees, or financial institutions from any liability from consequences that may occur. Only Tronair OEM replacement parts shall be used.

Parts List

When ordering Replacement Parts/Kits, please specify Model, Color and Serial Number of your Unit

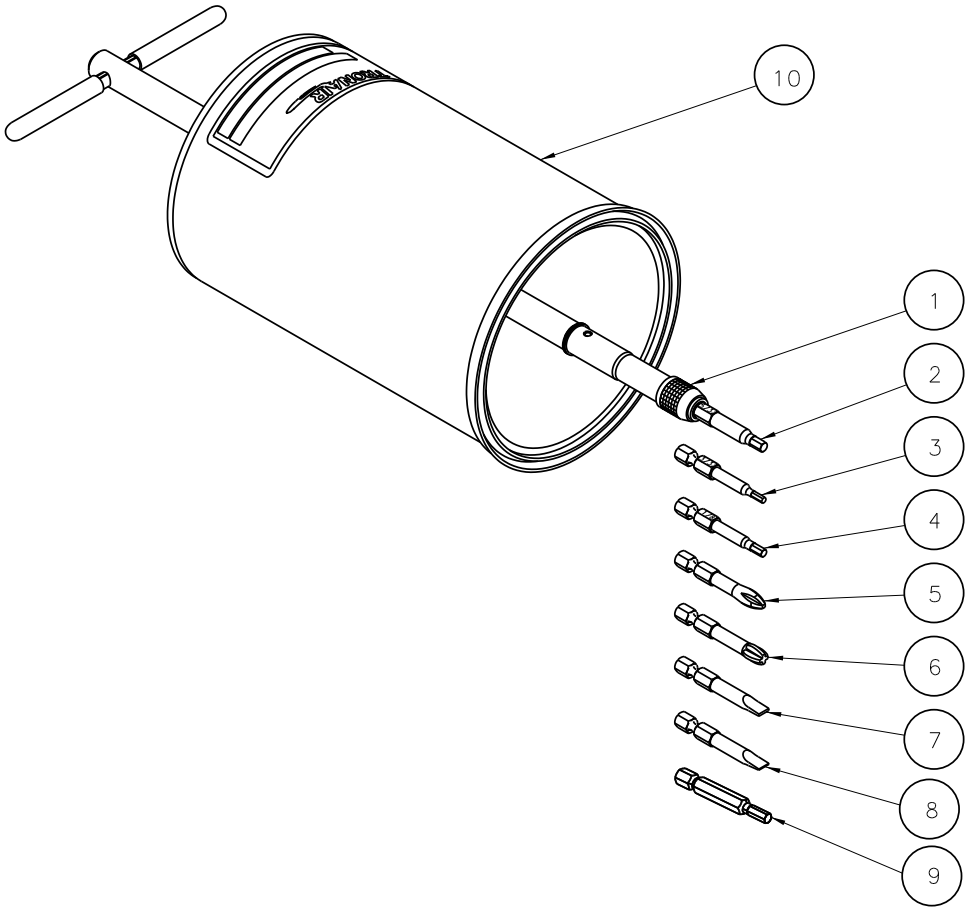

Item	Part Number	Description	Qty
1	Z-5052	Weldment, Shaft (with bit holder)	1
2	H-2824	Bit, 5/32 Ball Hex	1
3	H-2823	Bit, 3/32 Ball Hex	1
4	H-2825	Bit, 1/8 Ball Hex	1
5	H-2489	Bit, #2 Phillips	1
6	H-2490	Bit, #3 Phillips	1
7	H-2491	Bit, 8-10 Slotted	1
8	H-2921	Bit, 4-5 Flat Tip	1
9	H-3852	Bit, 4mm Ball Hex	1
10	K-4691	Kit, Cup Assembly	1

Tronair, Inc.
1 Air Cargo Pkwy East
Swanton, OH 43558

Phone: (419) 866-6301 | 800-426-6301
Web: www.tronair.com
Email: sales@tronair.com

For 07-3006-6900 sales, parts and service, click here to view this item on PilotJohn.com

07-3006-6900-A1 – Fuel Sample Unit

This product can not be modified without the written approval of Tronair, Inc. Any modifications done without written approval voids all warranties and releases Tronair, Inc., it suppliers, distributors, employees, or financial institutions from any liability from consequences that may occur. Only Tronair OEM replacement parts shall be used.

Parts List

When ordering Replacement Parts/Kits, please specify Model, Color and Serial Number of your Unit

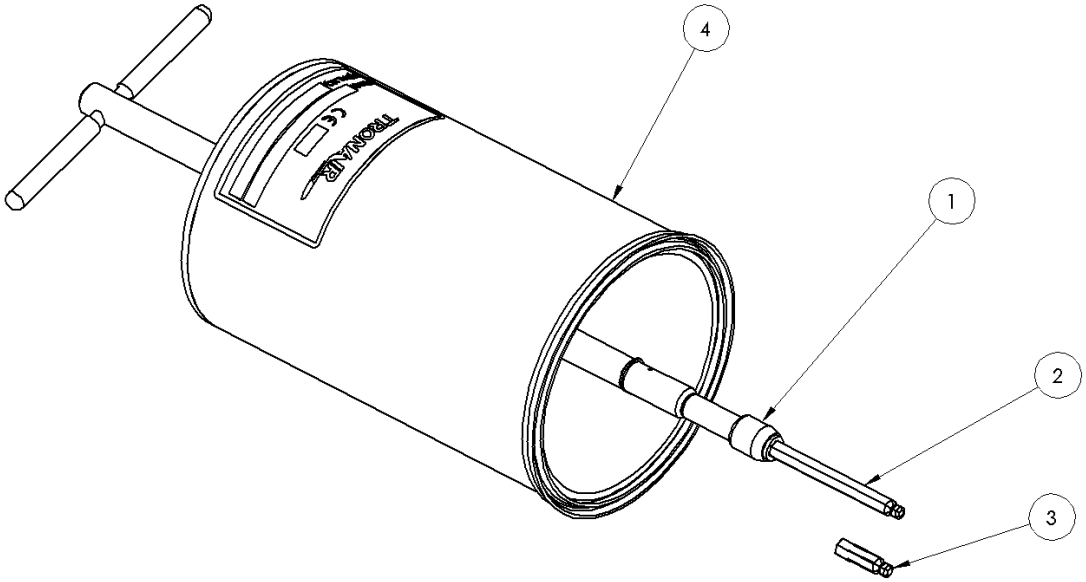

Item	Part Number	Description	Qty
1	Z-5052	Weldment, Shaft (with bit holder)	1
2	H-4581	Bit, 3/16 Ball Hex Long	1
3	H-4582	Bit, 3/16 Ball Hex Short	1
4	K-4691	Kit, Cup Assembly	1

Tronair, Inc.
1 Air Cargo Pkwy East
Swanton, OH 43558

Phone: (419) 866-6301 | 800-426-6301
Web: www.tronair.com
Email: sales@tronair.com

For 07-3006-6900 sales, parts and service, click here to view this item on PilotJohn.com

GUARANTEES/LIMITATION OF LIABILITY

Tronair products are warranted to be free of manufacturing or material defects for a period of one year after shipment to the original customer. This is solely limited to the repair or replacement of defective components. This warranty does not cover the following items:

a) Parts required for normal maintenance
b) Parts covered by a component manufacturers warranty
c) Replacement parts have a 90-day warranty from date of shipment

If you have a problem that may require service, contact Tronair immediately. Do not attempt to repair or disassemble a product without first contacting Tronair, any action may affect warranty coverage. When you contact Tronair be prepared to provide the following information:

a) Product Model Number
b) Product Serial Number
c) Description of the problem

If warranty coverage is approved, either replacement parts will be sent or the product will have to be returned to Tronair for repairs. If the product is to be returned, a Return Material Authorization (RMA) number will be issued for reference purposes on any shipping documents. Failure to obtain a RMA in advance of returning an item will result in a service fee. A decision on the extent of warranty coverage on returned products is reserved pending inspection at Tronair. Any shipments to Tronair must be shipped freight prepaid. Freight costs on shipments to customers will be paid by Tronair on any warranty claims only. Any unauthorized modification of the Tronair products or use of the Tronair products in violation of cautions and warnings in any manual (including updates) or safety bulletins published or delivered by Tronair will immediately void any warranty, express or implied.

The obligations of Tronair expressly stated herein are in lieu of all other warranties or conditions expressed or implied. **Any unauthorized modification of the Tronair products or use of the Tronair products in violations of cautions and warnings in any manual (including updates) or safety bulletins published or delivered by Tronair will immediately *void any warranty, express or implied* and Tronair *disclaims any and all liability for injury (WITHOUT LIMITATION and including DEATH), loss or damage arising from or relating to such misuse*.**

DECLARATION of CONFORMITY

The design, development and manufacture is in accordance with European Community guidelines

Relevant provisions complied with by the machinery:
EN ISO 12100-1

Relevant standards complied with by the machinery:
EN ISO 12100-1
EN 1915-1:2001 (5.20)

Identification of person empowered to sign on behalf of the Manufacturer:

Patrick Finch

Quality Assurance Representative

Tronair, Inc.
1 Air Cargo Pkwy East
Swanton, OH 43558

Phone: (419) 866-6301 | 800-426-6301
Web: www.tronair.com
Email: sales@tronair.com

For 07-3006-6900 sales, parts and service, click here to view this item on PilotJohn.com

For 07-3006-6900 sales, parts and service, click here to view this item on PilotJohn.com

The Tronair Family of Ground Support Equipment and cloud based EBis GSE Fleet Management

Cloud Based
Fleet Management

The premier global supplier of ground support equipment

For 07-3006-6900 sales, parts and service, click here to view this item on PilotJohn.com

The Tronair Family of GSE Product Lines

UNPARALLELED RANGE OF PRODUCTS FOR BUSINESS, COMMERCIAL AND MILITARY AIRCRAFT

LIFTING & SHORING (ATA-7)

Hydraulic Tripod Jacks
Axle Jacks
Jack Test Equipment
Stabilizing Stands & Alarms
Aircraft Recovery Dollies

LEVELING & WEIGHING (ATA-8)

Aircraft Weigh Equipment

TOWING AND TAXIING (ATA-9)

Towbar Systems
Tow Vehicles & Tractors

PARKING & MOORING (ATA-10)

Chocks & Covers

SERVICING (ATA-12)

Multi-Purpose Carts
Hydraulic & Engine Oil Servicing & Test Equipment
Lavatory Servicing Carts
Potable Water Transport Carts
Oxygen & Nitrogen Carts
Oxygen & Nitrogen Boosters

AIR CONDITIONING (ATA-21)

Air Conditioning Equipment
Coolant System Fill/Drain Carts
Cabin Pressurization Test Units

ELECTRICAL (ATA-24)

Ground Power Units
Battery Charger/Analyzer

FUEL (ATA-28)

Fuel Transfer Cart
Fuel Tools

HYDRAULIC POWER (ATA-29)

Hydraulic Power Units
Ram Air Turbine (RAT)
Hydraulic Coupling Hose Adaptors

ICE & RAIN PROTECTION (ATA-30)

Deicer Carts

AIRCRAFT TOOLING

Designed to your Specifications

LANDING GEAR (ATA-32)

Beadbreakers
Dollies - Wheel & Brake
Service Tools
Strut Service Carts
Regulators, Adaptors, Connectors & Gauges

FUSELAGE (ATA-53)

Lifts, Cranes & Hoists
Maintenance Platforms
Access Stands
Docking Systems

PROPELLERS (ATA-61)

Propeller Stands/Slings/Tools

POWER PLANT (ATA-71)

Engine Compressor Washers
Engine Hoists, Slings & Stands

CLOUD BASED FLEET MGT.

Manage your Repair Station, Multi Location Jet Center or Small Operation

INDUSTRY-WIDE GSE SOLUTIONS

www.tronair.com

www.columbusjack.com | www.daeind.com | www.datcomedia.com | www.eagletugs.com | www.malabar.com

Sales Offices: USA • Asia/China • Australia/New Zealand/Singapore • Europe/Middle East/Africa

Tronair, Inc. • 1 Air Cargo Pkwy East • Swanton, OH 43558, USA
Phone: 419-866-6301 | Toll Free: 1-800-426-6301 | Email: sales@tronair.com